USER MANUAL

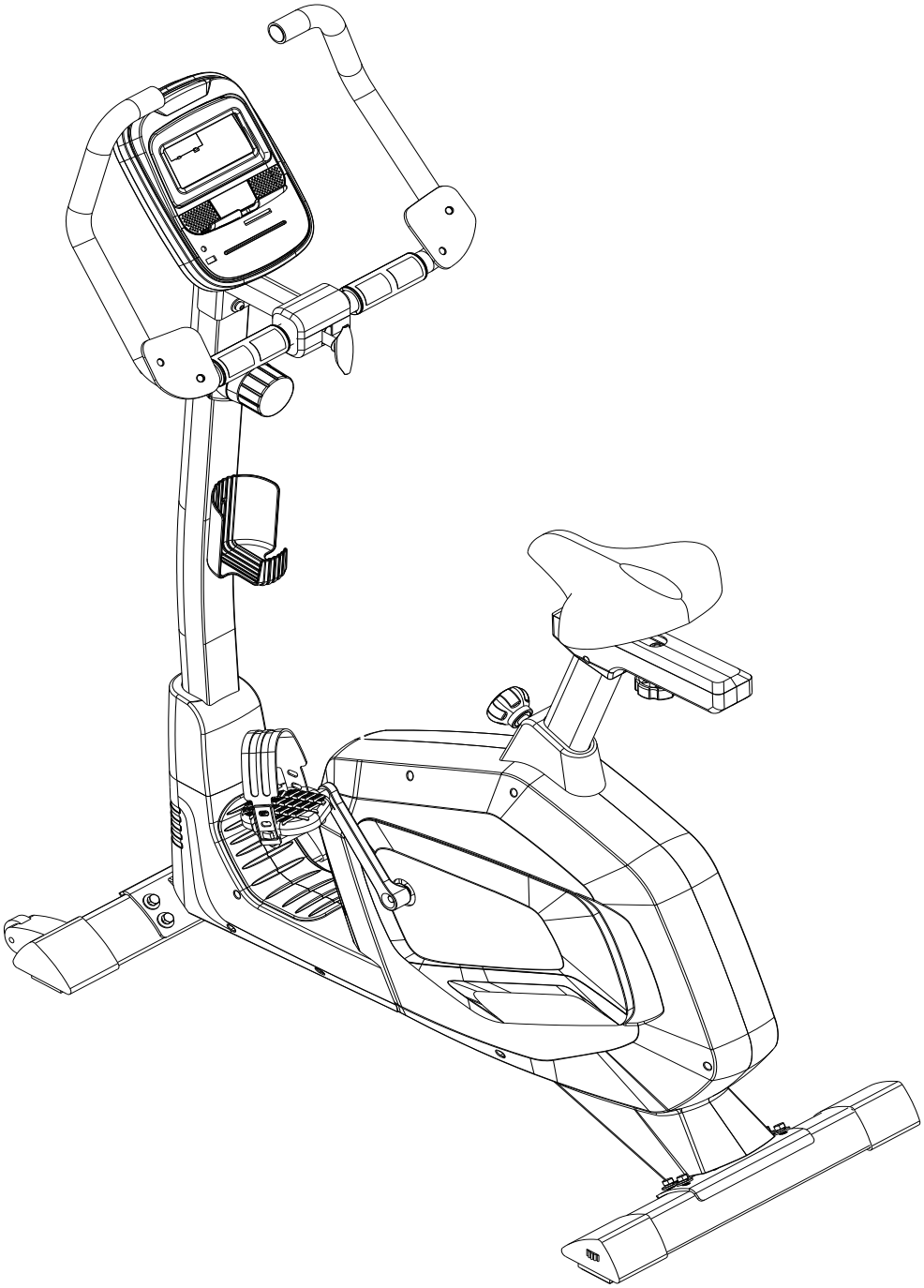

IMPORTANT! Please retain owner’s manual for maintenance and adjustment instructions.

IMPORTANT SAFETY INFORMATION

We thank you for choosing our product. To ensure your safety and health, please use this equipment correctly. It is important to read this entire manual before assembling and using the equipment. Safe and effective use can only be achieved if the equipment is assembled, maintained and used properly. It is your responsibility to ensure that all users of the equipment are informed of all warnings and precautions.

1. Before starting any exercise program, you should consult your physician to determine if you have any medical or physical conditions that could put your health and safety at risk, or prevent you from using the equipment properly. Your physician's advice is essential if you are taking medication that affects your heart rate, blood pressure or cholesterol level.
2. Be aware of your body's signals. Incorrect or excessive exercise can damage your health. Stop exercising if you experience any of the following symptoms: pain, tightness in your chest, irregular heartbeat, shortness of breath, lightheadedness, dizziness or feelings of nausea. If you do experience any of these conditions, you should consult your physician before continuing with your exercise program.
3. Keep children and pets away from the equipment. The equipment is designed for adult use only.
4. Use the equipment on a solid, flat level surface with a protective cover for your floor or carpet. To ensure safety, the equipment should have at least 2 feet (60 CM) of free space all around it.
5. Ensure that all nuts and bolts are securely tightened before using the equipment. The safety of the equipment can only be maintained if it is regularly examined for damage and/or wear and tear.
6. Always use the equipment as indicated. If you find any defective components while assembling or checking the equipment, or if you hear any unusual noises coming from the equipment during exercise, discontinue use of the equipment immediately and do not use until the problem has been rectified.
7. Wear suitable clothing while using the equipment. Avoid wearing loose clothing that may become entangled in the equipment.
8. Do not place fingers or objects into the moving parts of the equipment.
9. The maximum weight capacity of this unit is 120 KG.
10. The equipment is not suitable for therapeutic use.
11. To avoid bodily injury and/or damage to the product or property, proper lifting and moving is required.
12. Your product is intended for use in cool, dry conditions. You should avoid storage in extreme cold, hot or damp areas as this may lead to corrosion and other related problems.
13. This equipment is designed for indoor and home use only, it is not intended for commercial use!

EXPLODED DIAGRAM

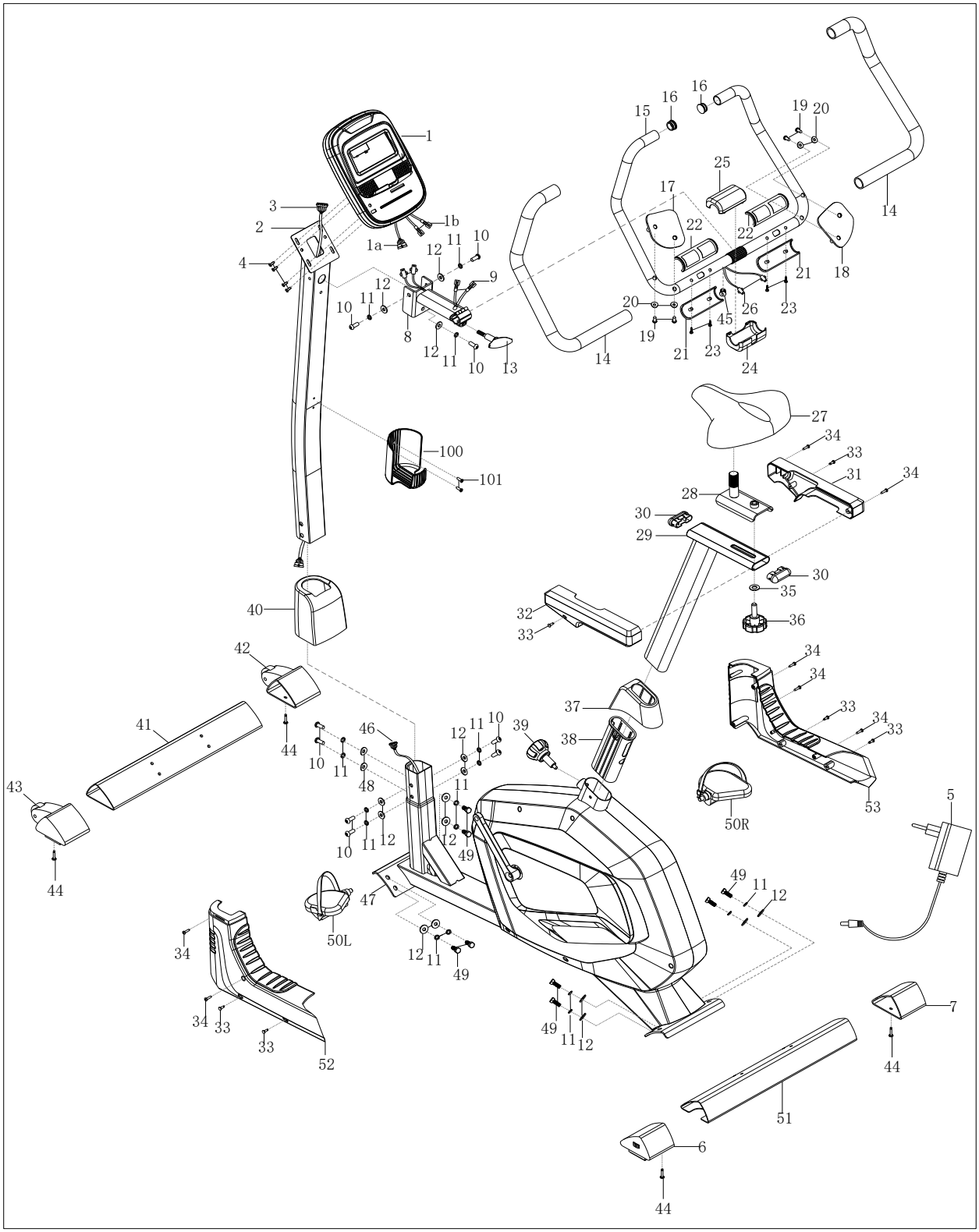

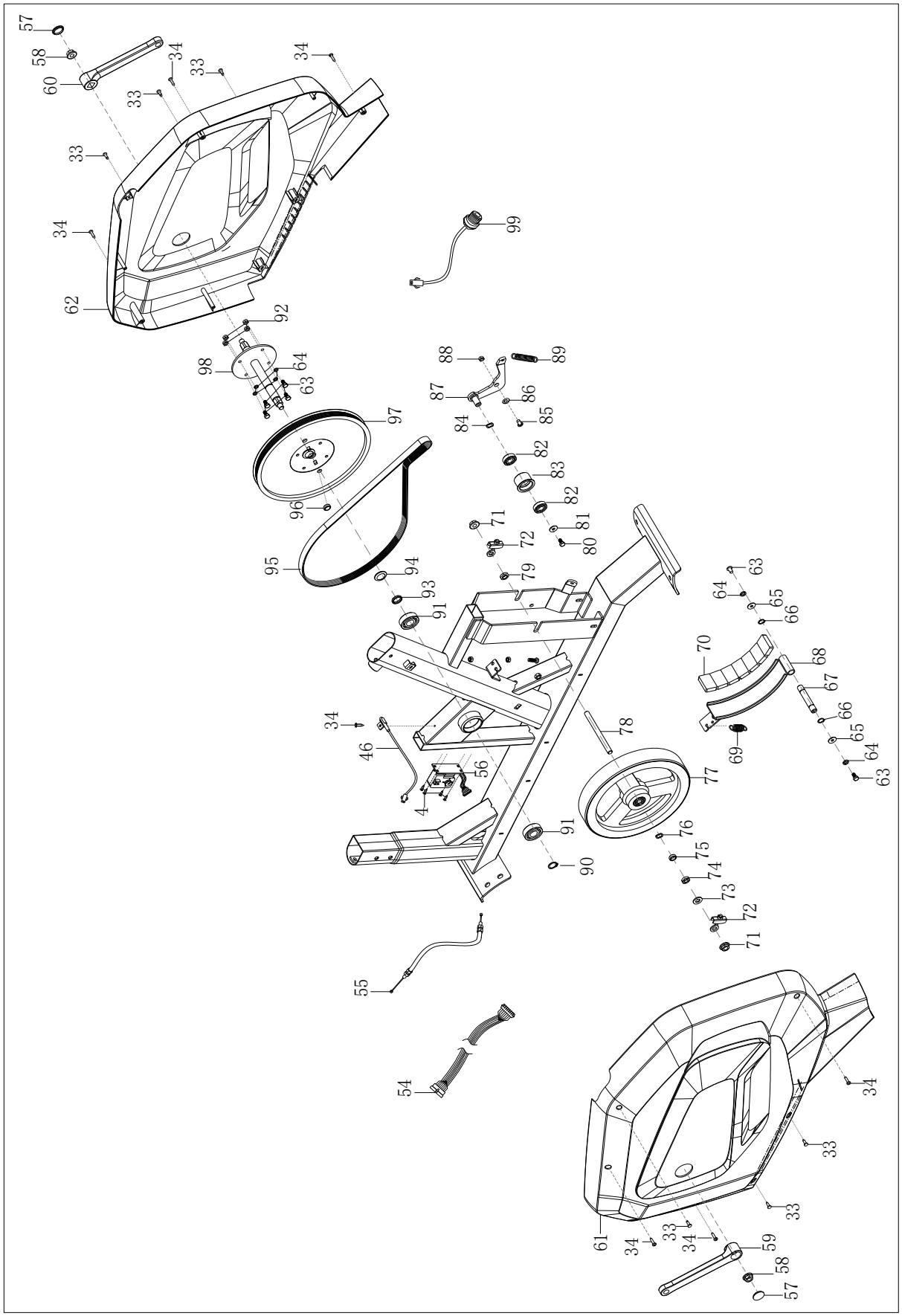
57
58
60
34
33
33
33
34
34
62
92
98
64
63
97
96
95
94
93
91
99
88
89
87
86
85
84
82
83
82
81
71
72
80
79
34
46
4
56
78
77
91
90
76
75
74
73
72
71
55
54
70
68
67
66
65
64
63
69
64
65
66
63
34
33
33
61
34
33
34
59
58
57

HARDWARE PACKAGE

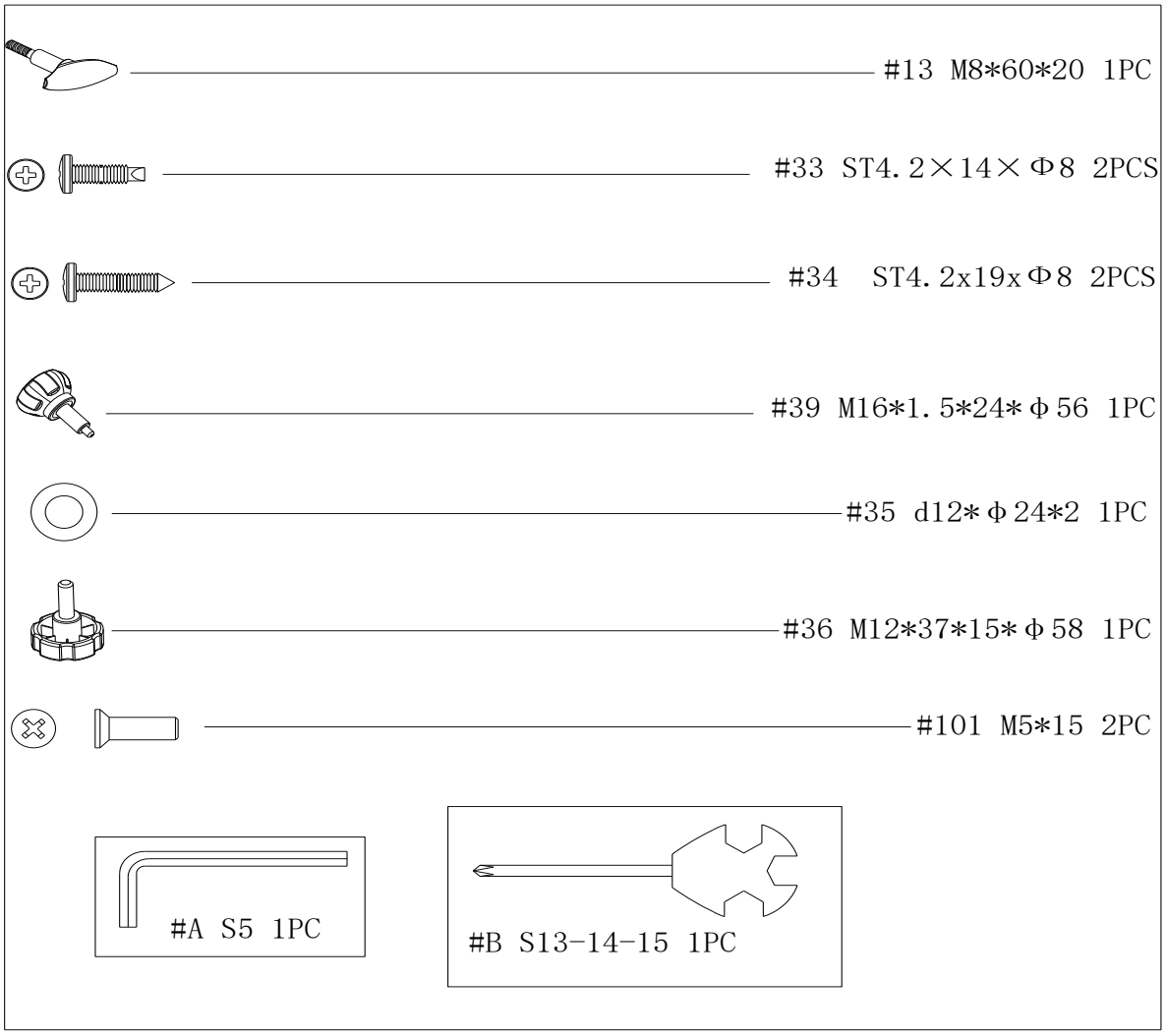

PARTS LIST

No.	Description	Qty.
1	Computer	1
2	Handlebar post	1
3	Trunk wire 1	1
4	Bolt M5*12	4
5	Adapter	1
6	End cap L	1
7	End cap R	1
8	Handlebar connecting join	1
9	Pulse trunk wire	2
10	Bolt M8*20*S5	9
11	Spring washer D8	17
12	Washer d8*ϕ20*2	15
13	Knob M8*60*20	1
14	Grip foam	2
15	Handlebar	1
16	Round end cap	2
17	Elbow Pad L	1
18	Elbow Pad R	1
19	Bolt M6*16*S5	4
20	Arc Washer d6*ϕ16*1.5*R16	4
21	Lower pulse plate	2
22	Upper pulse plate	2
23	Bolt ST3*25*ϕ5	4
24	Lower pulse cover	1
25	Upper pulse cover	1
26	Handle pulse wire	2
27	Saddle	1
28	Saddle plate	1
29	Saddle tube	1
30	Elliptical end cap	2
31	Cover of Saddle plate R	1

No.	Description	Qty.
32	Cover of Saddle plate L	1
33	Bolt ST4.2*14*ϕ8	16
34	Bolt ST4.2*19*ϕ8	14
35	Spring Washer d12*ϕ24*2	1
36	Knob	1
37	Saddle tube cover	1
38	Bushing	1
39	Knob	1
40	Handlebar post cover	1
41	Front Stabilizer	1
42	End cap with transportation wheel R	1
43	End cap with transportation wheel L	1
44	Bolt ST4.2*25*ϕ10.5	4
45	End cap	1
46	Sensor	1
47	Main Frame	1
48	Arc washer d8*ϕ20*2.0*R30	2
49	Bolt M8*20*S13	8
50L/R	Pedal L/R	1
51	Rear Stabilizer	1
52	Front cover L	1
53	Front cover R	1
54	Trunk wire 2	1
55	Resistance control cable	1
56	Motor	1
57	End cap	2
58	Nut M10*1.25	2
59	Crank L	1
60	Crank R	1
61	Chain cover L	1
62	Chain cover R	1

63	Bolt M6*16*S10	6
64	Spring Washer d6	6
65	Washer d6* ϕ 12*1	2
66	Washer d12	2
67	Axle of Magnetic plate	1
68	Magnetic plate	1
69	Tension spring ϕ 1.5* ϕ 15*47*12	1
70	Square magnet	1
71	Nut M10*1*H8*S15	2
72	Screws	2
73	Washer d10* ϕ 20*2	1
74	Nut M10*1*H5*S17	1
75	End cap	1
76	Wave washer d10* ϕ 15*0.3	1
77	Flywheel	1
78	Axle	1
79	Nut M10*1.0*H5*S17	1
80	Bolt M6*10*S10	1
81	Washer d6* ϕ 16*1.5	1
82	Bearing 6001	2
83	Idler	1

84	Wave Washer d12* ϕ 15.5	1
85	Bolt M8*12	1
86	Washer d12* ϕ 17	1
87	Idler rod	1
88	Nylon Nut M8*H7.5*S13	1
89	Tension spring ϕ 2.0* ϕ 12.2*62*20	1
90	Washer d17	1
91	Bearing 6203	2
92	Nylon nut M6*H6*S10	4
93	Bushing	1
94	Wave Washer d17* ϕ 22	1
95	Belt	1
96	Round magnet	1
97	Belt plate	1
98	Middle axle	1
99	Adapter Trunk wire	1
100	Bottle holder	1
101	Bolt M5*15	2
A	Wrench S5	1
B	Spanner S13-14-15	1

ASSEMBLY INSTRUCTIONS

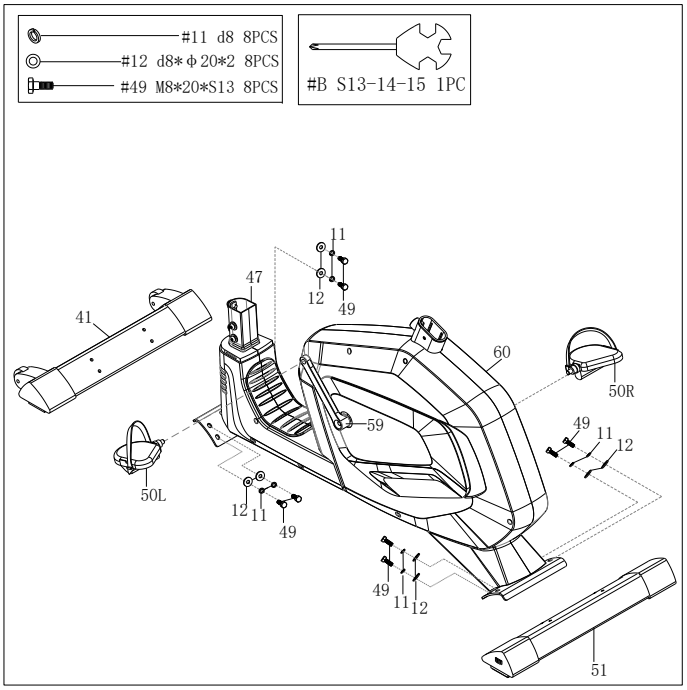

STEP 1:

Remove Bolts (49), Spring Washers (11), and Washers (12) from Front Stabilizer (41) and Rear Stabilizer (51) using Spanner (B).

Attach Front Stabilizer (41) and Rear Stabilizer (51) to Main Frame (47) using Bolts (49), Spring Washers (11), and Washers (12) that were removed. Tighten and secure with Spanner (B).

Tighten and secure the Left & Right Pedals (50L/R) on the Crank (59&60) with Spanner (B).

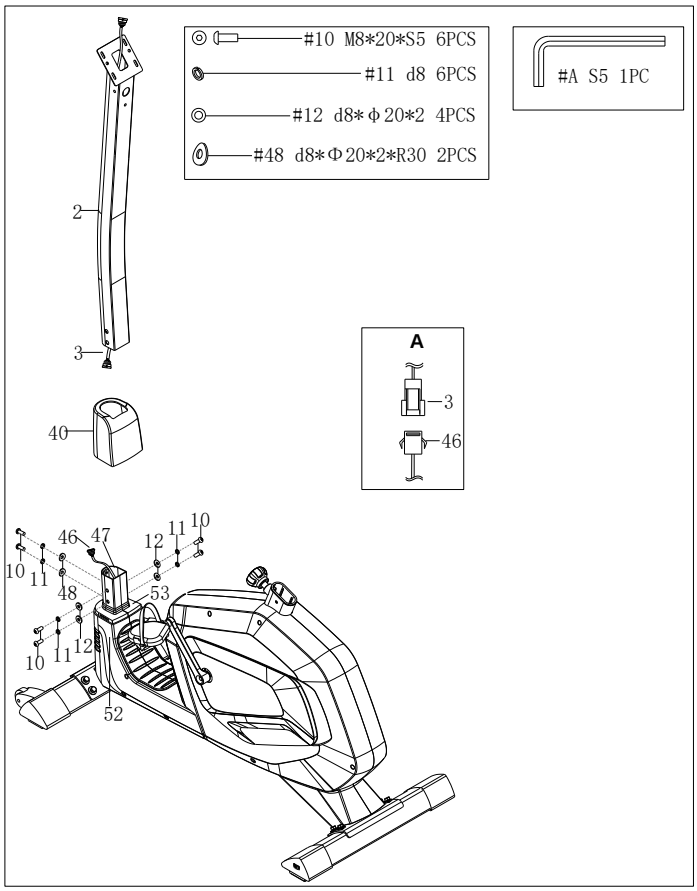

STEP 2:

Insert Handlebar post cover(40) to Handlebar post (2).

Connect Trunk Wire 1 (3) with Trunk wire 2 (46) as shown in picture A.

Remove Bolts (10), Spring Washers (11), Washers (12) and Arc washers(48) from Main Frame (47). Then attach Handlebar post (2) to Main Frame (47) with Bolts (10), Spring Washers (11), Washers (12) and Arc washers(48) that were removed by wrench(A).

Fix Handlebar post cover(40) to Front cover(52&53).

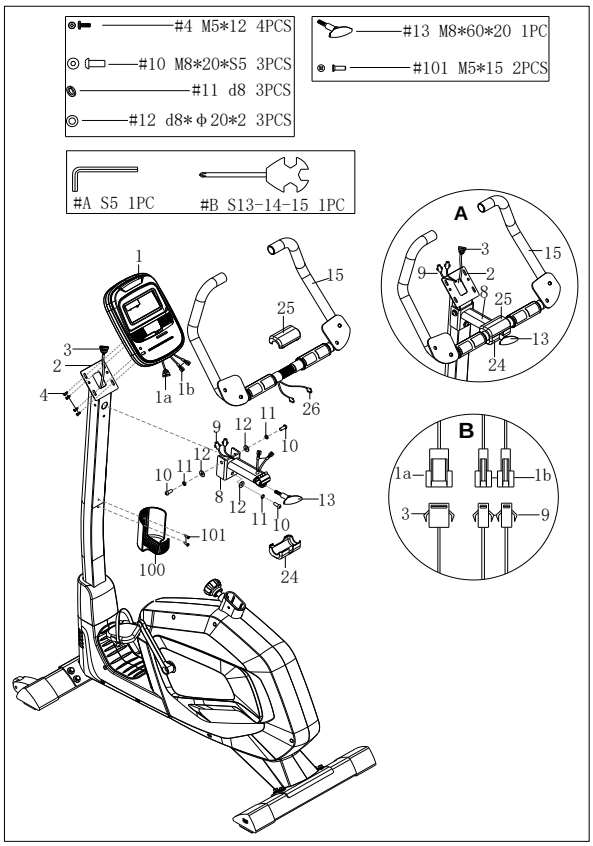

STEP 3:

Pull out pulse trunk wire(9) from the hole of handlebar post(2).

Remove Bolts (10), Spring Washers (11) and Washers (12) from handlebar post(2), then attach handlebar connecting join(8) to handlebar post(2) with Bolts (10), Spring Washers (11) and Washers (12) that were removed by wrench(A).

Fix handlebar(15) to handlebar connecting join(8) with Knob (13).

Connect Handle pulse wire (26) with pulse trunk wire(9). Fix Upper pulse cover and lower pulse cover (24&25) to handlebar(15). Connect pulse trunk wire(9) with computer wire(1b) and Connect trunk wire 1(3) with computer wire(1a).

Fix computer(1) to handlebar post(2) with bolts(4) by Spanner(B). Fix bottle holder(100) to handlebar post(2) with bolts(101) by Spanner(B).

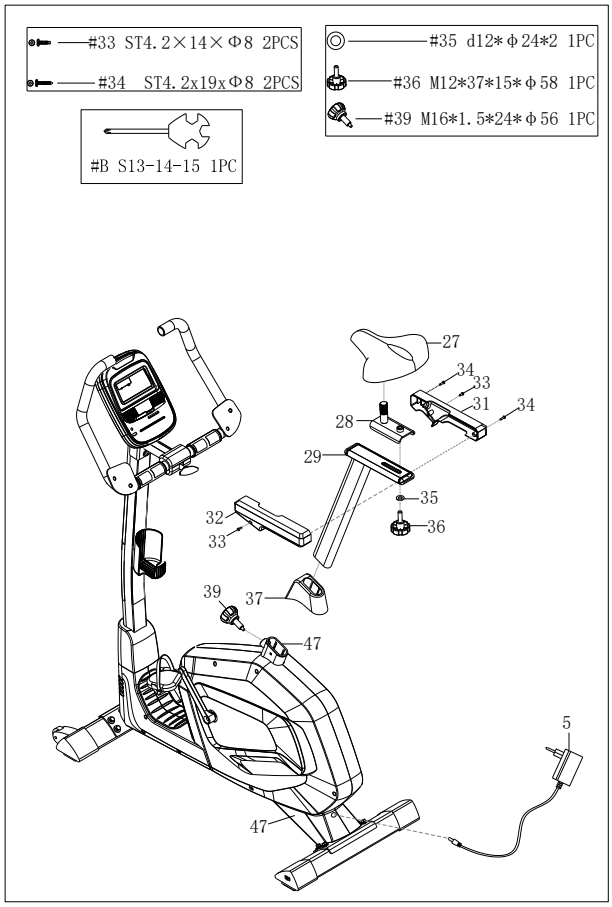

STEP 4:

Insert Saddle tube cover(37) to Main Frame (47). Attach Saddle tube(29) to Main Frame (47) with knob(39).

Fix Saddle plate(28) to Saddle tube(29) with knob(36) and washer(35).

Attach Saddle(27) to Saddle plate(28) using Spanner(A).

Fix cover of saddle plate(31&32) to Saddle tube(29) with bolts(33+34) by Spanner(A).

Insert Adapter line(5) to power hole on the back of Main frame(47), then plug the adapter into an outlet.

The assembly is complete!

MOVING THE MACHINE

To move the machine, push the handlebar join(15) until the transportation wheels(42&43)on the front stabilizer touch the ground. With the wheels on the ground, you can transport the bike to the desired location with ease.

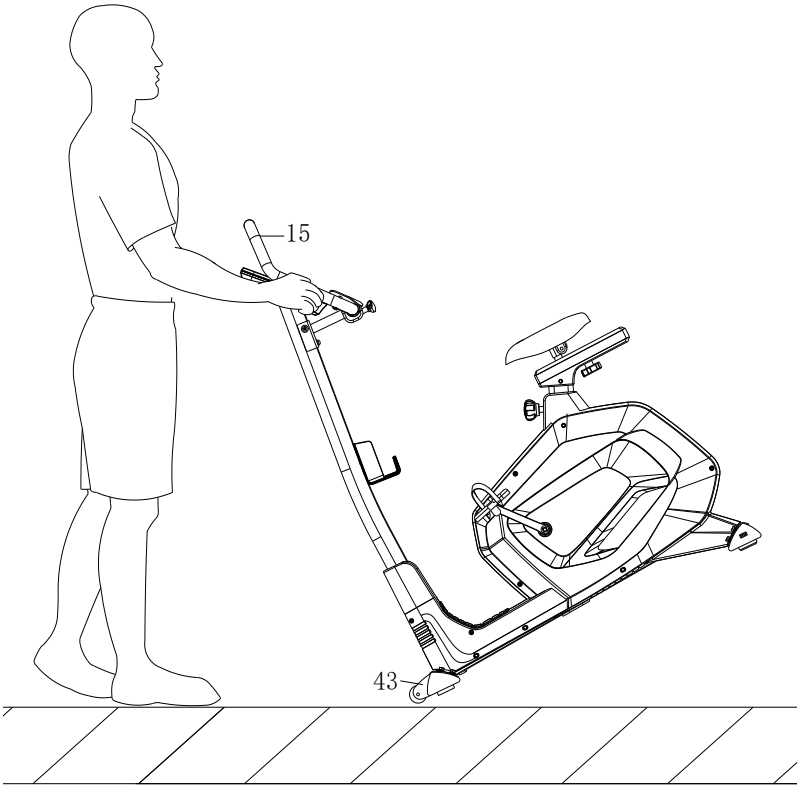

ADJUSTMENTS GUIDE

1. ADJUSTING THE BALANCE

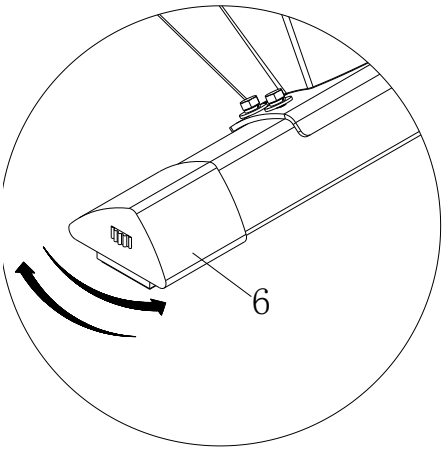

When this product is on an uneven surface, please adjust both foot pads on end cap(6&7) according to the instruction picture.

2. ADJUSTING THE HANDLEBAR

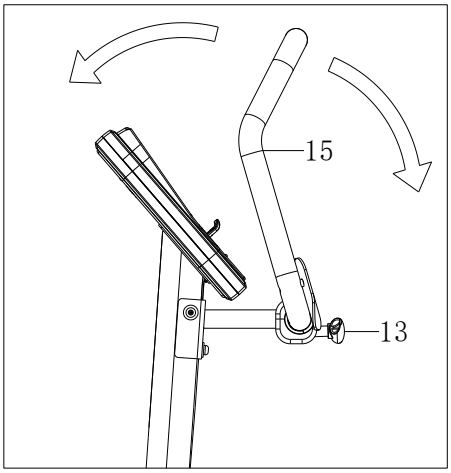

Unlock the Knob(13), then adjust the angle of Handlebar(15) to a available position according to the left instruction picture.

3. ADJUSTING THE SADDLE

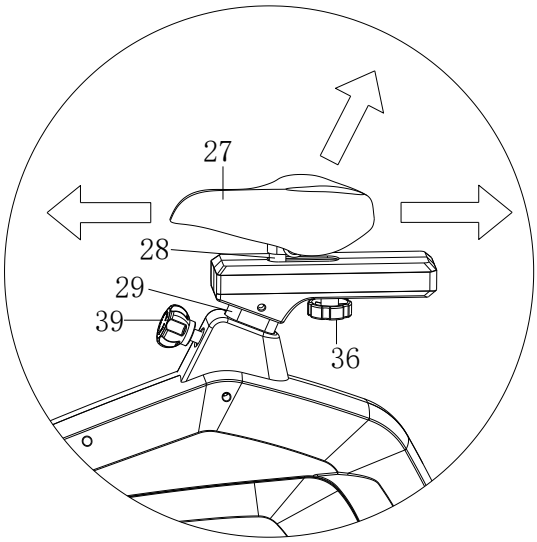

Rotate knob(39) *counter-clockwise* to adjust the height according as holes on saddle tube(29). Rotate knob (36) *counter-clockwise* to adjust the distance horizontal according as the arrows on saddle plate (28);

Quick Start Guide

Stretch exercise

No matter how you do sports, please do some stretch at first, The warm muscle will extend easily, so warm up yourself with 5-10minutes, Then We suggest the following stretch exercise, five times.10counts for each time or longer do these exercise again after sports.

1.Toe Touch

Slow bend forward from your waist, letting your back and shoulders relax as you stretch toward your toes, Reach down as far as you can and hold for 15 counts. And then relax, repeat 3 times.(Picture 1)

2.Hamstring Stretch

Sit with your right leg extend. Rest the sole of your left foot against your right inner thigh. Stretch toward your toe as far as possible. Hold for 15 counts. Relax and then repeat with left leg extend .Then relax and repeat 3 times for each leg.. (Picture 2)

3.Calf-Achilles Stretch

Lean against a wall with your left leg in front of the right and your arms forward,

Keep your right leg straight and the left foot on the floor, then bend the left leg and lean forward by moving your hips toward the wall, Hold, then repeat on the other side for 15 counts .Then relax and repeat 3 times for each leg(Picture 3)

4.Quadriceps stretch

With one hand against a wall for balance, reach behind you and pull your right foot up .Bring your heel as close to your buttocks. hold for 10-15counts,relax.Repeat three times for each foot.(Picture 4).

5.Inner Thigh Stretch

Sit with the soles of your feet together with your knees pointing outward. Pull your feet as close into your groin as possible. Gently push your knees towards the floor. Hold for 15 counts.Then relax and repeat 3 times.

(Picture 5).

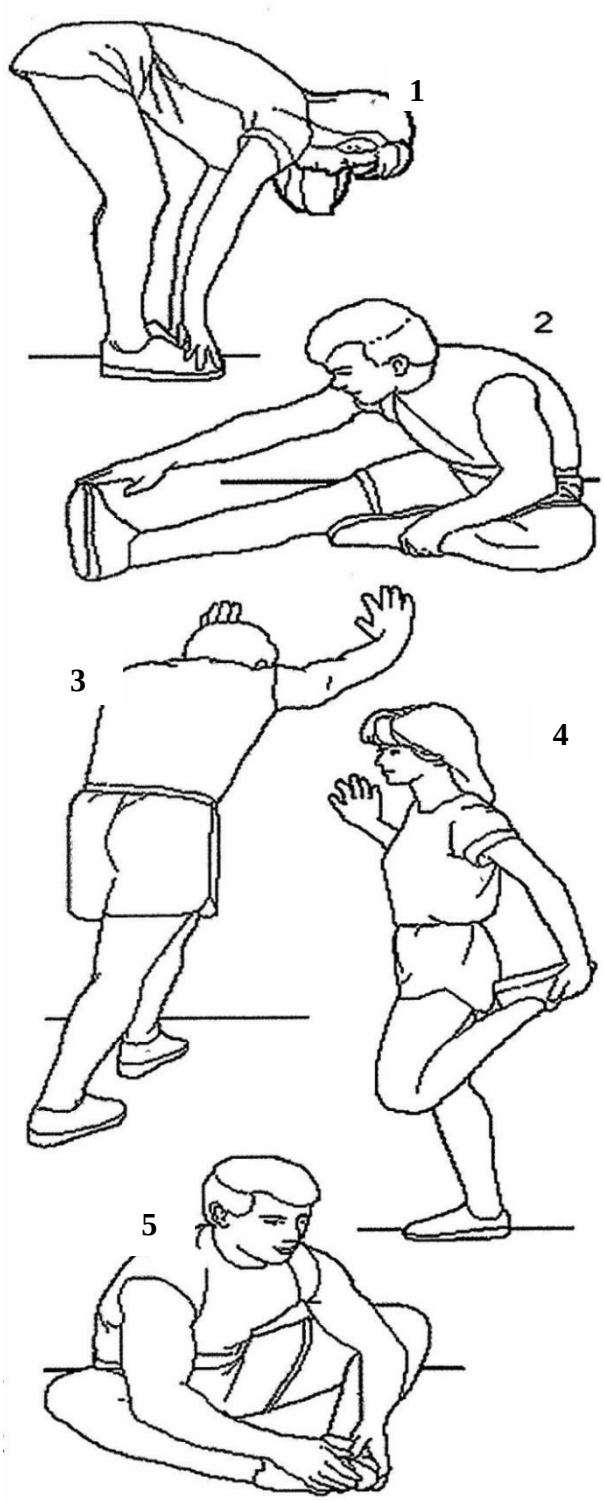

DISPLAY FUNCTIONS

ITEM	DESCRIPTION
TIME	Count up - No preset target, Time will count up from 00:00 to maximum 99:59 with each increment is 1 minute. Count down - If training with preset Time, Time will count down from preset to 00:00. Each preset increment or decrement is 1 minute between 00:00 to 99:00.
SPEED	Displays current training speed. Maximum speed is 99.9 KM/H or ML/H.
RPM	Displays the Rotation Per Minute. Display range 0~15~999
DISTANCE	Accumulates total distance from 0.00 up to 99.99 KM or ML. The user may preset target distance data by using UP/DOWN button. Each preset increment or decrement is 0.1KM or ML between 0.00 to 99.90 .
CALORIES	Accumulates calories consumption during training from 0 to maximum 9999 calories. (This data is a rough guide for comparison of different exercise sessions which can not be used in medical treatment.)
PULSE	User may set up target pulse from 0 - 30 to 230; and computer buzzer will beep when actual heart rate is over the target value during workout.
WATTS	Display current workout watts. Display range 0~999.
MANUAL	Manual mode workout.
PROGRAM	12 PROGRAM selection.
USER PROGRAM	User creates resistance level profile.
H.R.C.	Target HR training mode.
WATT PROGRAM	WATT constant training mode.

KEY FUNCTION

ITEM	DESCRIPTION
Up (Encoder)	Increase resistance level Setting selection.
Down (Encoder)	Decrease resistance level Setting selection.
Mode / Enter	Confirm setting or selection.
Reset	Press and hold for 2 seconds, computer will reboot and start from user setting. Reverse to main menu during preset workout value or stop mode.
Start / Stop	Start or Stop workout.
Recovery	Test heart rate recovery status.
Body fat	In stop mode, press it for body fat measurement

OPERATION PROCEDURE

POWER ON

Plug in power supply, computer will power on and display all segments on LCD for 2 seconds (Drawing 1).

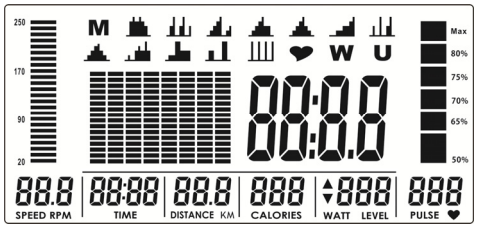

Drawing 1

Then enter into User data setting. Use UP or DOWN (Encoder) to select U1~U4, then set SEX, AGE, HEIGHT (Drawing 2), WEIGHT and confirm by pressing MODE / ENTER key. When finishing user data profile, Console come to main menu (Drawing 3).

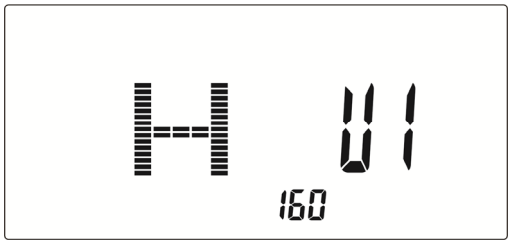

Drawing 2

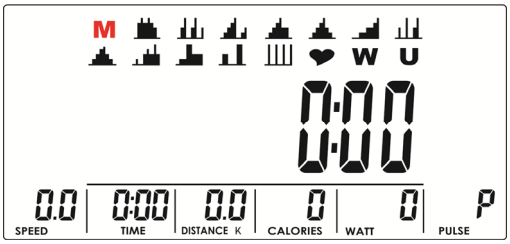

Drawing 3

WORKOUT SELECTION

Use UP or DOWN (Encoder) to select workout : M(Manual) →P(Program 1-12) → ♥(H.R.C) → W(WATTS) → U(User), press MODE / ENTER to get into.

<u>Manual Mode</u>

Press START in main menu may start workout in manual mode directly.

1. Use UP or DOWN (Encoder) to select workout program, choose M and press MODE / ENTER to get into.
2. Use UP or DOWN (Encoder) to adjust load level (Drawing 4), preset value 1.
3. Use UP or DOWN (Encoder) to set TIME (Drawing 5), DISTANCE (Drawing 6), CALORIES (Drawing 7), PULSE (Drawing 8) and press MODE / ENTER to confirm.
4. Press START/STOP key to start workout. During workout, user can also adjust load level by using UP or DOWN (Encoder). Load level display in WATT window, no adjusting for 3s, it will switch to display WATT (Drawing 9).
5. Press START/STOP key to pause workout. Press RESET to reverse to main menu.

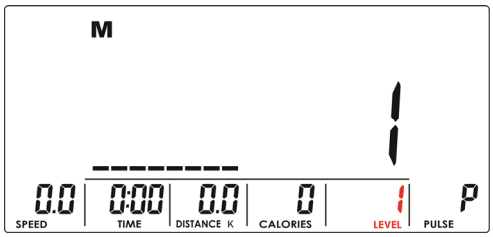

Drawing 4

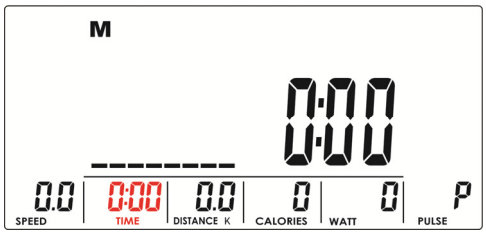

Drawing 5

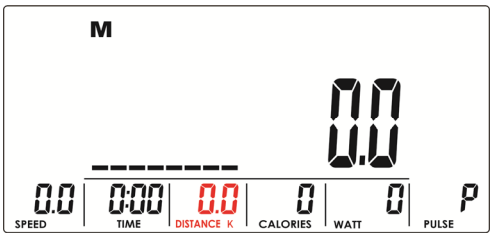

Drawing 6

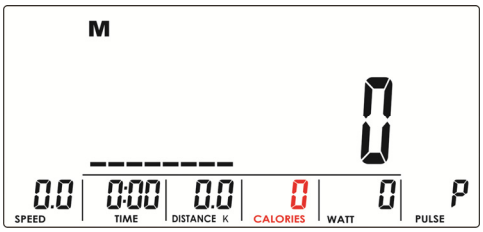

Drawing 7

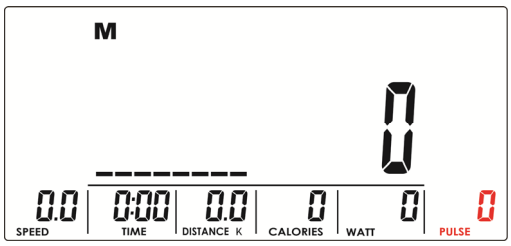

Drawing 8

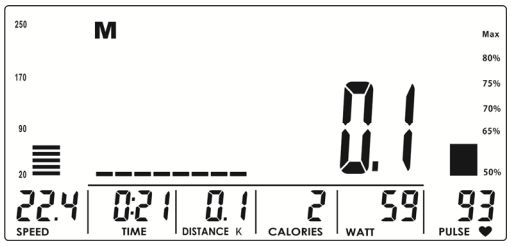

Drawing 9

Program Mode

1. Use UP or DOWN (Encoder) to select workout Program, choose P01 ,P02,P03,...P12. and press MODE / ENTER to get into.
2. Use UP or DOWN (Encoder) to adjust load level (Drawing 10), preset value 1.
3. Use UP or DOWN (Encoder) to set TIME.
4. Press START/STOP key to start workout. During workout, user can also adjust load level by using UP or DOWN (Encoder).
5. Press START/STOP key to pause workout. Press RESET to reverse to main menu.

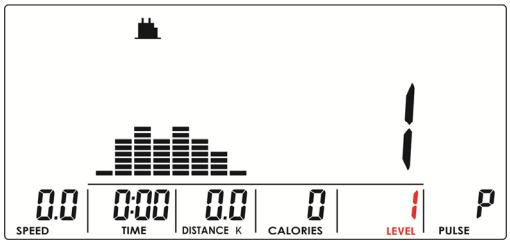

Drawing 10

H.R.C Mode

1. Use UP or DOWN (Encoder) to select workout program, choose ♥(H.R.C) and press MODE / ENTER to get into.
2. Use UP or DOWN (Encoder) to select 55% (Drawing 11),75%(Drawing 12),90% (Drawing 13) or TAG (TARGET H.R., default: 100) (Drawing 14). When select TAG, use UP or DOWN (Encoder) to set value 30~230.
3. Use UP or DOWN (Encoder) to set workout TIME.
4. Press START/STOP key to start or stop workout. Press RESET to reverse to main menu.

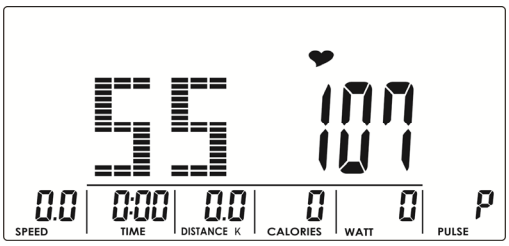

Drawing 11

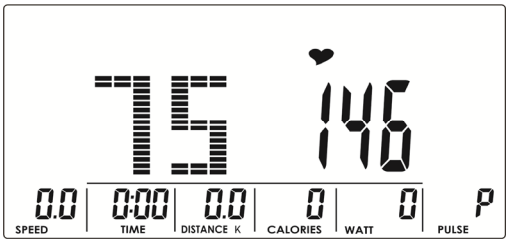

Drawing 12

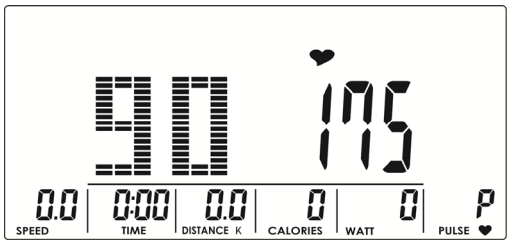

Drawing 13

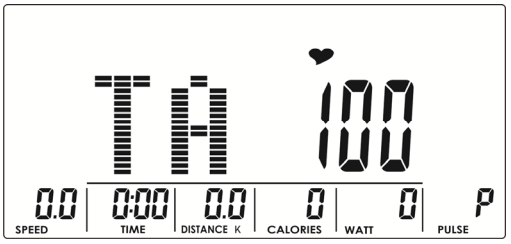

Drawing 14

Watt Mode

1. Use UP or DOWN (Encoder) to select workout program, choose **W** and press MODE / ENTER to get into.
2. Use UP or DOWN (Encoder) to set WATT target. (default: 120, Drawing 15)
3. Use UP or DOWN (Encoder) to set TIME.
4. Press START/STOP key to start workout. During workout, system will adjust load level automatically based on user training status. User can use UP or DOWN (Encoder) to adjust Watt level.
5. Press START/STOP key to pause workout. Press RESET to reverse to main menu.

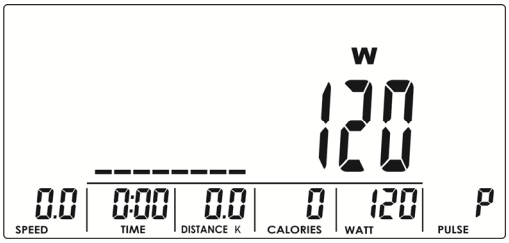

Drawing 15

User Program Mode

1. Use UP or DOWN (Encoder) to select workout program, choose **U** and press MODE / ENTER to get into.
2. Use UP or DOWN (Encoder) to create user profile (Drawing 16). There are total 8 column, user can adjust each column load level. User can hold MODE / ENTER 2 seconds to quit during setting.
3. Use UP or DOWN (Encoder) to set TIME.
4. Press START/STOP key to start workout. During workout, user can also adjust load level by using UP or DOWN (Encoder).
5. Press START/STOP key to pause workout. Press RESET to reverse to main menu.

Drawing 16

RECOVERY

After exercising for a period, keep holding on hand grips or wearing chest strap and press RECOVERY key. All function display will stop except “TIME” starts counting down from 00:60 to 00:00 (Drawing 17). Screen will display your heart rate recovery status with the F1, F2....to F6 (Drawing 18). F1 is the best, F6 is the worst. User may keep exercising to improve the heart rate recovery status. (Press the RECOVERY key again to return the main display.)

Drawing 17

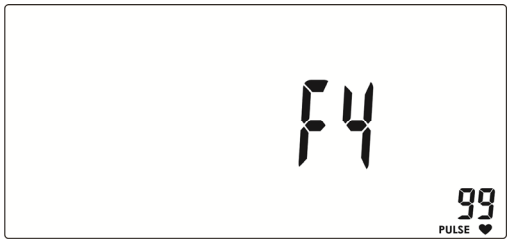

Drawing 18

BODY FAT

1. In STOP mode, press the BODY FAT key to start body fat measurement.
2. Console will display UX (Drawing 19) and start measuring (Drawing 20~21).
3. During measuring, users have to hold both hands on the hand grips. When console detect the pulse, LCD display as (Drawing 22) for 8 seconds until computer finish measuring.
4. LCD will display BMI (Drawing 23), FAT % (Drawing 24) and BODY FAT advice symbol (Drawing 25).
5. Error message:

*The LCD displays “---- “, “ ----”–means not hand the grip correctly.

*E-1–There is no heart rate signal input detected.

*E-4–Occurs when FAT% and BMI result is below 5 or exceeds 50.

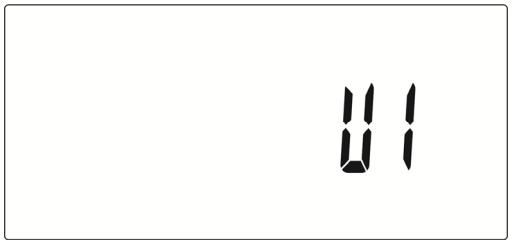

Drawing 19

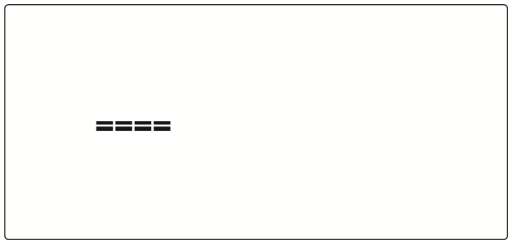

Drawing 20

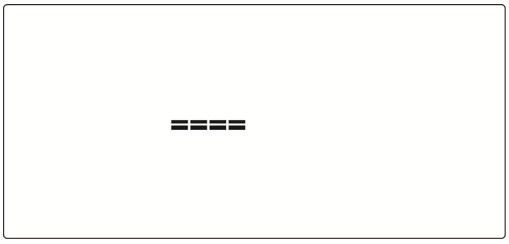

Drawing 21

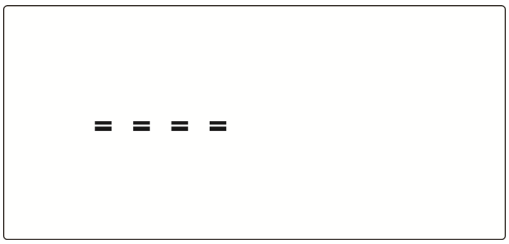

Drawing 22

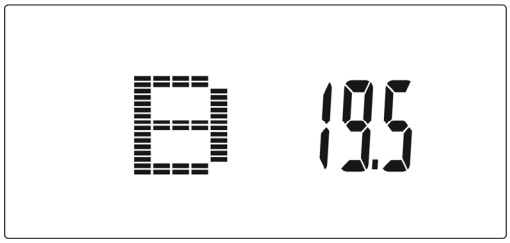

Drawing 23

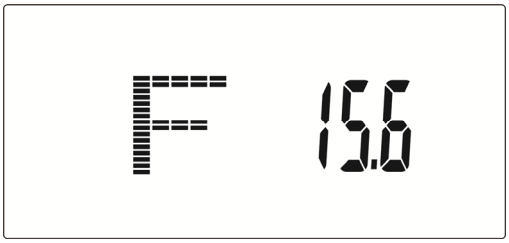

Drawing 24

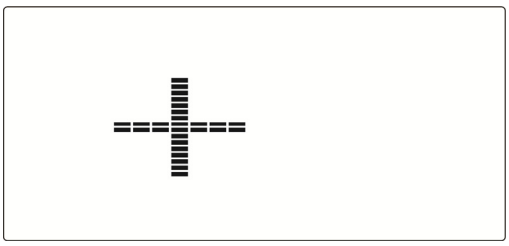

Drawing 25